P: 866.733.0233
www.solerpalaucanada.com

CLIPLOCK ROOF CURBS

STANDARD FEATURES

- 18 gauge galvanized steel construction
- 2" x 3" wood perimeter nailer

ITEM NO.	L (in)	W (in)
611214C	15	15
611216.5C	16.5	16.5
611218.5C	18.5	18.5
611222C	22.5	22.5
611226.5C	26.5	26.5
611227C	27.75	27.75
611228C	28.5	28.5
611230.5C	30.5	30.5
611231C	31	31
611233C	33.75	33.75
611234C	34.25	34.25
611235C	35	35
611237C	37	37
611238C	38	38
611240.25C	40.25	40.25
611240C	40.75	40.75
611243C	43	43
611249C	49	49
611249.5C	49.5	49.5
611252C	52	52
611255C	55	55
611261C	61	61
611267C	67	67

CLIPLOCK CORNER DETAIL

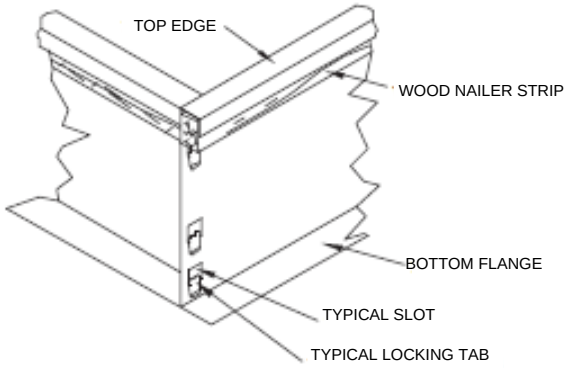

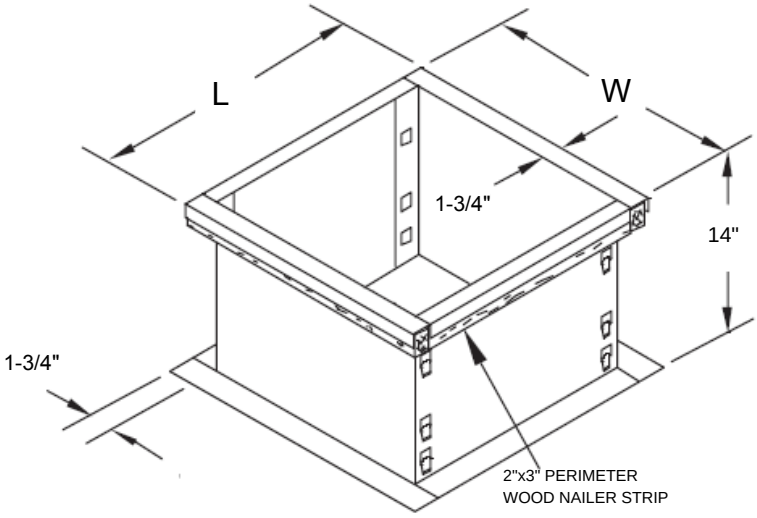

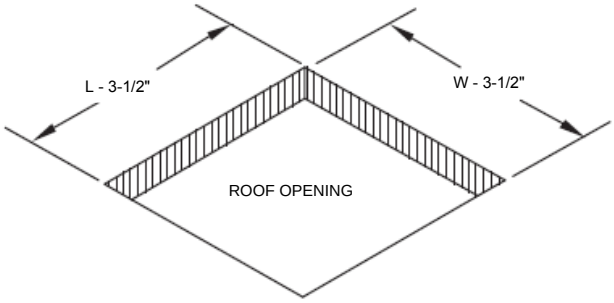

Soler&Palau Ventilation Group